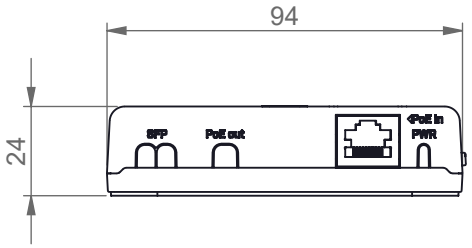

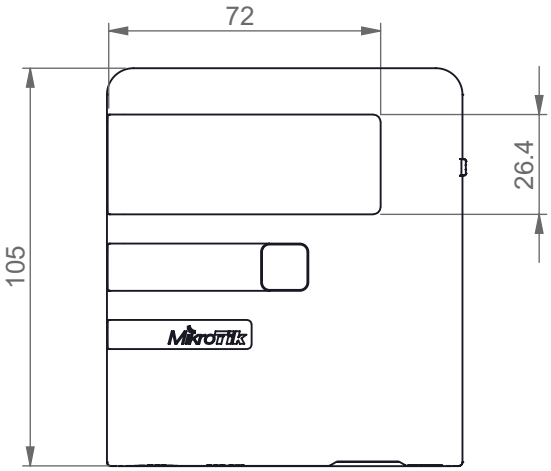

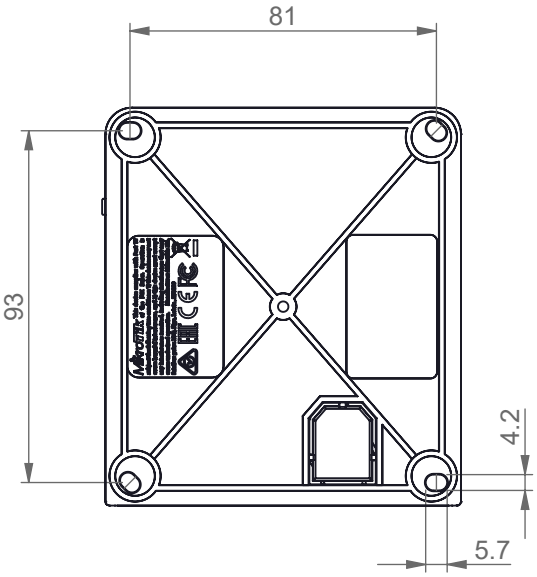

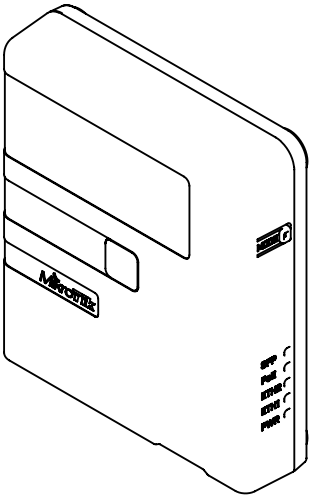

MikroTik

GPeN21

DIMENSIONS ARE IN MILLIMETERS
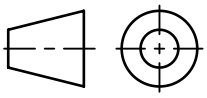
Printed: 23/03/2020